Desulphurization of combustion flue-gases by Wet Oxidation Scrubbing (WOS)

D. Flagiello, A. Lancia, A. Erto, F. Di Natale
domenico.flagiello@unina.it
Department of Chemical, Materials and Production Engineering of the University of Naples Federico II, P.le Tecchio, 80 - 80125 Naples, Italy

Abstract
In this work, we report the experimental findings of an innovative flue-gas desulphurization process based on the wet oxidation scrubbing (WOS), using sodium chlorite ($NaClO_2$) which offers strong oxidizing power even in acid conditions, generally unfavorable for the absorption of acid gases.
For this reason, it was tested in order to obtain the solubility data of SO_2 and compare them with those in a pure seawater. Experimental results showed that the solubility of SO_2 in sodium chlorite seawater-based solution (0.2% w/w) increased about 20-30% compared to pure seawater.

Introduction
Flue-gas desulphurization (FGD) units are commonly used for the capture of SO_2 deriving from both land combustion stations and marine diesel engine exhausts. Current regulations on SO_2 emissions for land stations and marine transport (IMO Marpol) are increasingly stringent and force for a prompt development of efficient processes to increase the desulphurization performances and, at the same time, allowing a size plant reduction, especially for naval field where the space is very limited **[1,2]**. Wet-FGD scrubbers have been generally preferred to dry or semi-dry processes due to the better removal performance and for minor scale and clogging problems of the equipment **[2,3]**. Conventional wet processes can be enhanced with the use of basic additives in aqueous solution such as ammonia (NH_3), caustic soda (NaOH), or other alkaline compounds, such as a seawater **[2,4]**.
Another interesting alternative could be the use of oxidizing chemicals in aqueous solution that allow more effective SO_2 absorption thanks to oxidative mechanisms that lead to the formation of sulphates. This technology is able to offer a considerable saving in terms of capital and operating costs, also associated to a plant size reduction because requires less water consumption. However, a high consumption of the oxidizing reagent could be required; hence, an optimization of its dosage is mandatory.
The current literature on wet oxidation scrubbing identifies the following substances as chemicals with oxidizing properties: $NaClO_2$ **[5]**, H_2O_2 **[6]**, $Na_2S_2O_8$ **[7]** and Fe^{II}-EDTA **[8]**. Sodium chlorite ($NaClO_2$) is one of the most promising additives thanks to its oxidizing nature both in alkaline and acidic conditions. Under acid conditions, $NaClO_2$ has a greater oxidative potential due to the

formation of further oxidants, such as $ClO_{2(aq)}$ and $Cl_{2(aq)}$. The correct assessment of the thermodynamic behavior of oxidative solution towards SO_2 is a mandatory step for the optimization of a wet oxidation scrubber for FGD process.
This work aims to test the oxidative performance of sodium chlorite in seawater-based solutions by measuring the solubility of SO_2 and finally compare it with the solubility data in a pure seawater **[4]**. The experiments were performed in a feed-batch bubble column fed with a simulated flue-gas containing SO_2 from 100 to 2000 ppm_v, using a pure seawater and sodium chlorite (0.1% and 0.2% by weight) seawater-based as absorbing solutions.

Theory on oxidative absorption of SO_2 in chlorite aqueous solutions

SO_2 gas can be absorbed by aqueous $NaClO_2$ solutions and oxidized to generate different ions such as SO_3^{2-}, HSO_3^-, SO_4^{2-}. On contrary, ClO_2^- is mainly reduced to ClO^- and Cl^-. A drawback of sodium chlorite is that it has good oxidizing ability at low pH, even if acidic conditions are generally unfavorable for acid gases absorption, such as SO_2 **[5,9]**. Nevertheless, the chlorite solutions allow its capture by oxidation acidic mechanisms **[5,9]**. In fact, the low pH values have a strong impact on the formation of the other strong oxidizers, i.e. $ClO_{2(g)}$ and $Cl_{2(g)}$.
Park et al. [9] suggest that the reaction pathways can be divided into two different reactive schemes, depending on whether the reaction occurs under acidic conditions or not. The alkaline oxidation mechanism of $SO_{2(g)}$ in $NaClO_2$ aqueous solution include the liquid-gas phase equilibrium **[4]**, SO_2 hydrolysis reactions in water **[4]** and oxidation reactions with chlorite **[9]**:

$$SO_{2(g)} \rightleftharpoons SO_{2(aq)} \tag{1}$$

$$SO_{2(aq)} + 2H_2O \rightleftharpoons HSO_3^- + H_3O^+ \tag{2}$$

$$HSO_3^- + H_2O \rightleftharpoons SO_3^{2-} + H_3O^+ \tag{3}$$

$$2HSO_3^- + ClO_2^- + 2H_2O \rightarrow 2SO_4^{2-} + Cl^- + 2H_3O^+ \tag{4}$$

$$2SO_3^- + ClO_2^- \rightarrow 2SO_4^{2-} + Cl^- \tag{5}$$

The overall reaction with $NaClO_2$ aqueous solutions could be obtained from the previous equations (**Eqs. (1-5)**) as also proposed by **Krzyzynska and Hutson [10]**.

$$SO_{2(aq)} + ClO_2^- + 2H_2O \rightarrow 2H_2SO_{4(aq)} + Cl^- \tag{6}$$

Chien et al. [11] showed with experimental measurements that all the sulphur present as SO_2 into the flue-gas is completely converted to its maximum oxidation state (i.e. as sulfates), in fact: the standard Gibbs free energy is negative at room temperature and atmospheric pressure ($\Delta G°$= -853 kJ/mol) for **Eq. (6)**, as calculated according to Hess's law using data provided by **Perry and Green [12]**.
The absorption of SO_2 with $NaClO_2$ rapidly lowers the solution pH, activating an acidic oxidation mechanism thanks to ClO_2 ($\Delta G°$= -211 kJ/mol) and Cl_2 ($\Delta G°$= -98 kJ/mol) formation **[9,13]**.

$$5ClO_2^- + 4H_3O^+ \rightarrow 4ClO_{2(aq)} + Cl^- + 6H_2O \quad (7)$$

$$ClO_2^- + 4H_3O^+ + 3Cl^- \rightarrow 2Cl_{2(aq)} + 6H_2O \quad (8)$$

The color of solution changes from yellowish (moderately acid pH) rapidly becoming greenish (strongly acid pH) associated a pungent odor due to chlorine-based gas **[9,11]**. The overall reactions for SO_2 oxidation under acidic conditions are shown below **[5,9]**:

$$5SO_{2(aq)} + 2ClO_{2(aq)} + 6H_2O \rightarrow 5H_2SO_{4(aq)} + 2HCl \quad (9)$$

$$SO_{2(aq)} + Cl_{2(aq)} + 2H_2O \rightarrow H_2SO_{4(aq)} + 2HCl \quad (10)$$

The standard Gibbs free energies of the reactions with chlorine dioxide and chlorine are -1255 kJ/mol and -223 kJ/mol, respectively.

Kaczur [13] retrieved the standard redox potentials of ClO_2^-/Cl^- (1.59 V), ClO_2/Cl^- (1.51 V), Cl_2/Cl^- (1.35 V), confirming that ClO_2 and ClO_2^- have similar values, greater than Cl_2. **Park et al. [9]** observed that oxidation reaction by chlorine was not predominant since its formation from chlorite decomposition can be considered as negligible with respect to chlorine dioxide generation. Hence, it is possible to consider both the oxidation pathways showed in **Eq. (6)** and **Eqs. (9,10)** as active reaction mechanisms under acidic conditions.

Moreover, chlorine-based compounds can be present also in gaseous stream, determining an additive oxidative mechanism due to ClO_2 and Cl_2 desorption **[10]**. Therefore, the reactive mechanism in **Eqs. (9,10)** taken into account in aqueous solution must be considered also for the gas phase.

Materials and Methods

The simulated flue-gas was prepared by mixing SO_2 (5000 ppm_v in N_2) with N_2 (99.99%) both available in pressurized cylinders supplied by Rivoira Gas (Italy). The absorbing solutions were a seawater (pH 8.2) and two solutions based on seawater with sodium chlorite ($NaClO_2$) at 0.1% w/w (pH 8.33) and 0.2% w/w (pH 8.55). Sodium chlorite was purchased from VWR International Chemicals with technical grade (80% w/w).

The seawater was characterized by ionic chromatography (Metrohm AG, 883 Basic IC PLUS) and its chemical properties are reported in **Flagiello et al. [4]**. The pH of the aqueous solutions was measured with a digital pH-meter (PCE-228 model).

Absorption experiments aimed to assess SO_2 solubility data and were performed at 25°C and 1 atm in a feed-batch bubble column consisting in a Pyrex glass vessel (inner diameter: 30 mm; total length: 300 mm) provided with an external jacket (42mm i.d.) with recirculating water for a fine-tuning of the system temperature. The bubble column was equipped with a gas distributor using a porous septum P-2 (40 - 100 micron) for small bubbles formation in order to increase the gas-liquid contact surface.

Gas flow rate was measured and controlled with two flowmeters (ASA, E5-2600/A/H model) and gas temperature was kept constant by an Omron PID

controller. Temperature in the bubble column and at the inlet and the outlet gas lines were measured by a digital thermometer with three reading channels (PCE Instruments, T-390 model). Pressure was controlled by two manometers installed on the inlet and outlet gas lines of the bubble column (WIKA, 232.50 model).
The flowsheet of the experimental device is similar to set-up used in **Flagiello et al. [4]**, and is showed in **Figure 1**:

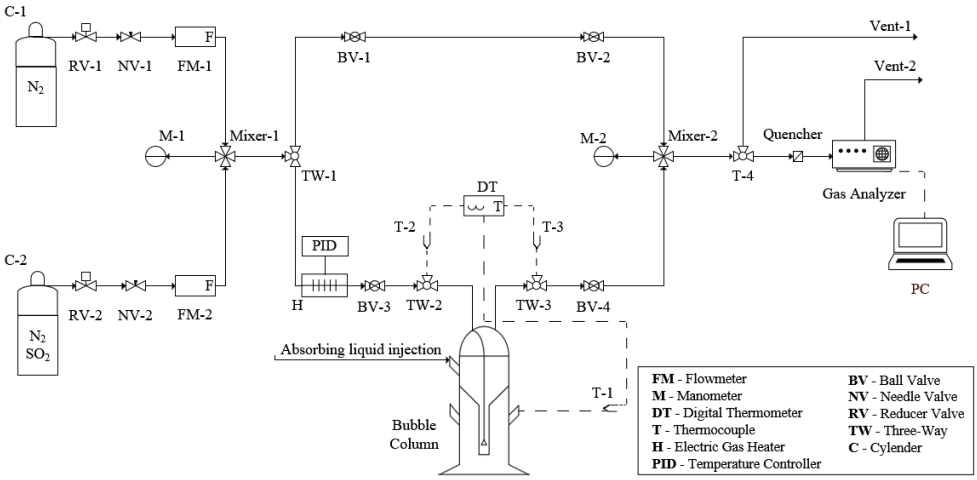

Figure 1. Experimental set-up for SO_2 absorption tests.

For each test, 17 g of absorbing solution (M_S) was charged into the bubble column and a constant volumetric flow (G_v= 60 L/h) of simulated flue-gas ($C°_{SO2}$= 100-2000 ppm_v corresponding to a mole fraction of SO_2 $y°_{SO2}$= 0.0001-0.002 mol/mol, balance N_2) was fed, until saturation (t*, [s]). Time course of SO_2 concentration in the gas flowing out from the column, C_{SO2} (or y_{SO2}), was followed with an IR gas analyzer (ABB O2020®) obtaining the so-called breakthrough curves.
The mass balance on SO_2 over the feed-batch column allows calculating the mole fraction of total SO_2 dissolved (x_S*) in the absorbing solution at equilibrium with the initial gas concentration of SO_2 ($C°_{SO2}$), as detailed in **Flagiello et al. [4]**:

$$x_S^* = \frac{G_m MW_S}{M_S} \int_{t=0}^{t=t^*} \left(y_{SO_2}^{\circ} - y_{SO_2} \right) dt \qquad (11)$$

where G_m [mol/s] is the molar flow rate of flue-gas and MWs [g/mol] is the molecular weight of the absorbing solution.

Results and Discussion

Figure 2 reported the solubility data (A) and pH values of saturated absorbing solutions (B) obtained during the SO_2 absorption in the bubble column, using a pure seawater and sodium chlorite seawater-based solutions at 0.1% and 0.2% w/w.

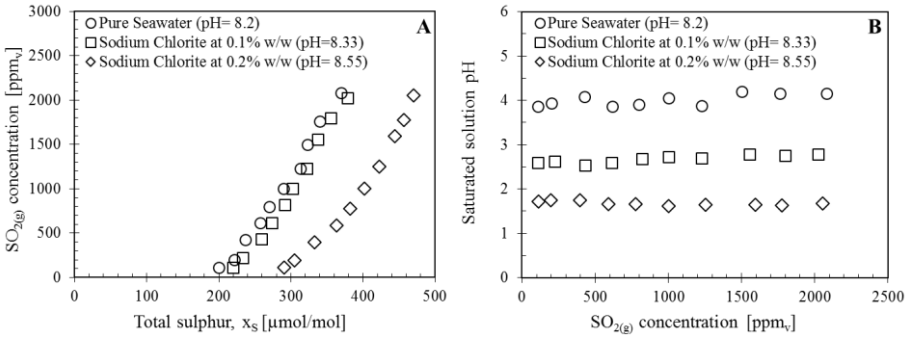

Figure 2. Solubility data (A) and saturated pH values of solutions (B) for SO_2 absorption into pure seawater (○), seawater with 0.1% w/w of $NaClO_2$ (□) and seawater with 0.2% w/w of $NaClO_2$ (◊).

Experimental results in **Figure 2** (A) showed an almost linear trend with increasing SO_2 concentration similar to Henry's law for a purely physical absorption, except for low concentrations where the behavior of the solubility curves is typical of chemical absorption patterns. When the sodium chlorite content in the solution is increased, a considerable enhance in SO_2 solubility was observed especially for the seawater-based solution was doped with 0.2% w/w of $NaClO_2$. The solubility values for pure seawater and for the solution doped with 0.1% of $NaClO_2$ were very similar, probably because the low chlorite content did not allow a strong activation of the acidic oxidative mechanisms which leads to additional oxidizers formation such as chlorine (Cl_2) and chlorine dioxide (ClO_2). The establishment of acidic conditions were experimentally observed during the tests; in fact, the two chlorite solutions rapidly became greenish and then returned yellow light until transparent when the system reached saturation. The staining sequence was slower in 0.2% w/w doped solutions and this confirmed that a prolonged activation of the oxidative mechanisms in acidic conditions improved absorption performance.
The pH of the saturated solutions (**Figure 2** (B)) deriving from chlorite addition (1.5-2.5) were below those retrieved for the pure seawater (3.5-4.0) and this confirmed a greater quantity of SO_2 absorbed and converted into sulfuric acid. In addition, the results showed that as the chlorite content in solution increased, increasingly acid pH was reached.

Conclusions

In this work, an innovative study was proposed on wet oxidation scrubbing (WOS) for the flue-gas desulphurization from coastal combustion stations and marine diesel engine applications using sodium chlorite as oxidative chemical.
Experimental results showed that the solubility of SO_2 increased about 20-30% compared to pure seawater when chlorite was added to 0.2% by weight, while only 2-9% increase was achieved with 0.1%. The oxidation process, unlike conventional chemicals such as NaOH, NH_3 or other alkaline species, was strongly favored by

the acidic conditions that prevailed during SO_2 capture until the total consumption of $NaClO_2$. In addition, it was observed that chlorite solutions reach a lower final pH than pure seawater, confirming a greater amount of SO_2 captured.
The equilibrium data retrieved are a mandatory step for a thorough scrubber design and optimization for WOS unit in order to improve desulphurization performance compared to current technologies in use.

References

[1] Flagiello, D., Di Natale, F., Erto, A., Lancia, A., "Marine diesel engine flue gas desulphurization by seawater scrubbing in a structured packing absorption column", *Proceedings of the 40th ASICI*, Rome, Italy, (2017).

[2] Flagiello, D., Parisi, A., Lancia, A., Carotenuto, C., Erto, A., Di Natale, F., "Seawater desulphurization scrubbing in spray and packed columns for a 4.35 MW marine diesel engine", *Chemical Engineering Research and Design* 148: 56-67 (2019).

[3] Biondo, S. J., Marten J. C., "History of flue-gas desulfurization systems since 1850. research, development, and demonstration", *J. Air Pollut. Control Assoc.*, United States, 27(10) (1977).

[4] Flagiello, D., Erto, A., Lancia, A., Di Natale, F., "Experimental and modelling analysis of seawater scrubbers for sulphur dioxide removal from flue-gas", *Fuel* 214: 254-263 (2018).

[5] Adewuyi, Y. G., He, X., Shaw, H., Lolertpihop, W., "Simultaneous absorption and oxidation of NO and SO_2 by aqueous solutions of sodium chlorite" *Chemical engineering communications* 174(1): 21-51 (1999).

[6] Liémans, I., Thomas, D., "Simultaneous NO_x and SO_x reduction from oxyfuel exhaust gases using acidic solutions containing hydrogen peroxide", *Energy Procedia* 37: 1348-1356 (2013).

[7] Adewuyi, Y. G., Sakyi, N. Y., "Simultaneous absorption and oxidation of nitric oxide and sulfur dioxide by aqueous solutions of sodium persulfate activated by temperature", *Industrial & Engineering Chemistry Research*, 52(33): 11702-11711 (2013).

[8] Wang, L., Zhao, W., Wu, Z., "Simultaneous absorption of NO and SO_2 by $Fe^{II}EDTA$ combined with Na_2SO_3 solution", *Chemical Engineering Journal* 132(1-3): 227-232 (2007).

[9] Park, H. W., Choi, S., Park, D. W., "Simultaneous treatment of NO and SO_2 with aqueous $NaClO_2$ solution in a wet scrubber combined with a plasma electrostatic precipitator", *Journal of hazardous materials* 285: 117-126 (2015).

[10] Krzyzynska, R., Hutson, N. D., "Effect of solution pH on SO_2, NO_x, and Hg removal from simulated coal combustion flue gas in an oxidant-enhanced wet scrubber", *Journal of the Air & Waste Management Association* 62(2): 212-220 (2012).

[11] Chien, T. W., Chu, H., Hsueh, H. T., "Kinetic study on absorption of SO_2 and NO_x with acidic $NaClO_2$ solutions using the spraying column" *Journal of Environmental engineering* 129(11): 967-974 (2003).

[12] Perry, R. H., Green, D. W., Maloney, J. O., *Perry's chemical engineers' handbook* McGraw-Hill, 1997.

[13] Kaczur, J. J., "Oxidation chemistry of chloric acid in NO_x/SO_x and air toxic metal removal from gas streams", *Environmental progress* 15(4): 245-254 (1996).